P438-3

Output Ratings

Voltage, Frequency		Prime	Standby
400V, 50 Hz	kVA		
	kW		
480V, 60 Hz	kVA	400	437.5
	kW	320	350

Ratings at 0.8 power factor.
Please refer to the output ratings technical data section for specific generator set outputs per voltage.

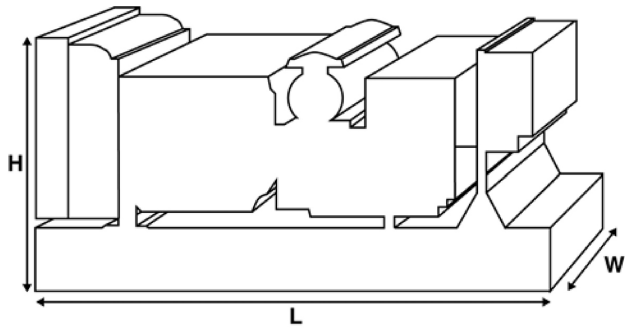

Dimensions and Weights

Length	mm	3800 (149.6)
Width	mm	1131 (44.5)
Height	mm	2156 (84.9)
Weight (Dry)	kg	3103 (6841)
Weight (Wet)	kg	3161 (6969)

Ratings in accordance with ISO 8528, ISO 3046, IEC 60034, BS5000 and NEMA MG-1.22.
Generator set pictured may include optional accessories.

Prime Rating

These ratings are applicable for supplying continuous electrical power (at variable load) in lieu of commercially purchased power. There is no limitation to the annual hours of operation and this model can supply 10% overload power for 1 hour in 12 hours.

Standby Rating

These ratings are applicable for supplying continuous electrical power (at variable load) in the event of a utility power failure. No overload is permitted on these ratings. The alternator on this model is peak continuous rated (as defined in ISO 8528-3).

Standard Reference Conditions

Note: Standard reference conditions 25°C (77°F) Air Inlet Temp, 100m (328 ft) A.S.L. 30% relative humidity.
Fuel consumption data at full load with diesel fuel with specific gravity of 0.85 and conforming to BS2869: 1998, Class A2.

FG Wilson offer a range of optional features to allow you to tailor our generator sets to meet your power needs.
Options available include:

- Upgrade to CE Certification
- A wide range of Sound Attenuated Enclosures
- A variety of generator set control and synchronising panels
- Additional alarms and shutdowns
- A selection of exhaust silencer noise levels

For further information on all of the standard and optional features accompanying this product please contact your local Dealer or visit:

www.fgwilson.com

P438-3

Ratings and Performance Data

Engine Make		Perkins	
Engine Model:		2206A-E13TAG5	
Alternator Make		FG Wilson	
Alternator Model:		FG29A280	
Control Panel:		0	
Base Frame:		Heavy Duty Fabricated Steel	
Circuit Breaker Type:		3 Pole MCCB	
Frequency:		50 HZ	60 HZ
Engine Speed: RPM	rpm		1800
Fuel Tank Capacity:	litres (US gal)	888 (234.58)	
Fuel Consumption Prime	litres (US gal)		80.4 (21.2)
Fuel Consumption Standby	litres (US gal)		88.1 (23.3)

Engine Technical Data

No. of Cylinders		6
Alignment		IN LINE
Cycle		4 STROKE
Bore	mm (in)	130 (5.1)
Stroke	mm (in)	157 (6.2)
Induction		TURBOCHARGED AIR TO AIR CHARGE COOLED
Cooling Method		WATER
Governing Type		ELECTRONIC
Governing Class		ISO 8528 G2
Compression Ratio		16.3:1
Displacement	L (cu. in)	12.5 (762.8)
Moment of Inertia:	kg m^2 (lb/in^2)	2.77 (9465)
Voltage		24
Ground		Negative
Battery Charger Amps		70
Engine Weight Dry	kg (lb)	1301 (2868)
Engine Weight Wet	kg (lb)	1351 (2978)

Engine Performance Data		50 Hz	60 Hz
Engine Speed	rpm		1800
Gross Engine Power Prime	kW (hp)		373.4 (501)
Gross Engine Power Standby	kW (hp)		406.5 (545)
BMEP Prime	kPa (psi)		1991 (288.8)
BMEP Standby	kPa (psi)		2168 (314.4)

P438-3

Fuel System

Fuel Filter Type:			Replaceable Element		
Recommended Fuel:			Class A2 Diesel		
Fuel Consumption at		110 % Load	100 % Load	75 % Load	50 % Load
50 Hz Prime:	l/hr (US gal/hr)				
50 Hz Standby	l/hr (US gal/hr)	-			
60 Hz Prime	l/hr (US gal/hr)	88.1 (23.3)	80.4 (21.2)	61.4 (16.2)	44.5 (11.8)
60 Hz Standby	l/hr (US gal/hr)	-	88.1 (23.3)	66.5 (17.6)	47.6 (12.6)

(Based on diesel fuel with a specific gravity of 0.85 and conforming to BS2869 classA2,EN590

Air System

		50 Hz	60 Hz
Air Filter Type:		Non Canister	
Combustion Air Flow Prime	m^3/min (cfm)		23.8 (840)
Combustion Air Flow Standby	m^3/min (cfm)		25.7 (908)
Max. Combustion Air Intake Restriction	kPa		6.4 (25.7)

Cooling System

		50 Hz	60 Hz
Cooling System Capacity	l (US gal)		45.2 (11.9)
Water Pump Type:		Centrifugal	
Heat Rejected to Water & Lube Oil: Prime	kW (Btu/min)		137.5 (7819)
Heat Rejected to Water & Lube Oil: Standby	kW (Btu/min)		148.9 (8468)
Heat Radiation to Room*: Prime	kW (Btu/min)		65.6 (3731)
Heat Radiation to Room*: Standby	kW (Btu/min)		70.6 (2713)
Radiator Fan Load:	kW (hp)		19 (25.5)
Radiator Cooling Airflow:	m^3/min (cfm)		538.2 (19006)
External Restriction to Cooling Airflow:	Pa (in H2O)		125 (0.5)

*: Heat radiated from engine and alternator
Designed to operate in ambient conditions up to 50°C (122°F).
Contact your local FG Wilson Dealer for power ratings at specific site conditions.

Lubrication System

Oil Filter Type:		Eco, Full flow
Total Oil Capacity:	l (US gal)	40 (10.6)
Oil Pan Capacity:	l (US gal)	38 (10)
Oil Type:		API CH4 SAE15W-40
Oil Cooling Method:		WATER

Exhaust System

		50 Hz	60 Hz
Maximum Allowable Back Pressure:	kPa (in Hg)		10 (3)
Exhaust Gas Flow: Prime	m^3/min (cfm)		67.5 (2384)
Exhaust Gas Flow: Standby	m^3/min (cfm)		74.5 (2631)
Exhaust Gas Temperature: Prime	°C (°F)		618.2 (1145)
Exhaust Gas Temperature: Standby	°C (°F)		680 (1256)

P438-3

Alternator Physical Data

No. of Bearings:	1
Insulation Class:	H
Winding Pitch:	2/3
Winding Code	R1
Wires:	12
Ingress Protection Rating:	IP21
Excitation System:	SHUNT
AVR Model:	A-OPT-04E

Alternator Operating Data

Overspeed: rpm		2250
Voltage Regulation: (Steady state)		+/- 1.0
Wave Form NEMA = TIF:		50
Wave Form IEC = THF:		2
Total Harmonic content LL/LN:		3
Radio Interference:		EN61000-6
Radiant Heat: 50 Hz	kW (Btu/min)	
Radiant Heat: 60 Hz	kW (Btu/min)	23.3 (1325)

Alternator Performance Data 50 Hz:

Voltage Code						
Motor Starting Capability*	kVA					
Short Circuit Capacity	%		300	300	300	300
Reactances	Xd					
	X'd					
	X"d					

Alternator Performance Data 60 Hz

Voltage Code		480/277 V 240/139 V	380/220 V			440/254 V 220/127 V
Motor Starting Capability*	kVA	1117	747			1005
Short Circuit Capacity	%	300	300	300	300	300
Reactances	Xd	3.341	4.528			3.723
	X'd	0.12	0.163			0.133
	X"d	0.11	0.149			0.123

Reactances shown are applicable to prime ratings.

*Based on 30% voltage dip at 0.6 power factor.

P438-3

Output Ratings 50 Hz

	Prime		Standby	
Voltage Code	kVA	kW	kVA	kW
415/240V				
400/230V				
380/220V				
230/115V				
220/127V				
220/110V				
200/115V				
240V				
230V				
220V				

Output Ratings 60 Hz

	Prime		Standby	
Voltage Code	kVA	kW	kVA	kW
480/277V	400	320	437.5	350
440/254V	400	320	437.5	350
416/240V				
400/230V				
380/220V	362.5	290	398.8	319.04
240/139V	400	320	437.5	350
240/120V				
230/115V				
220/127V	400	320	437.5	350
220/110V				
208/120V				
240/120				
220/110				

P438-3

Dealer Contact Details

Documentation

Operation and maintenance manual including circuit wiring diagrams.

Generator Set Standards

The equipment meets the following standards: BS5000, ISO 8528, ISO 3046, IEC 60034, NEMA MG-1.22.

Warranty

6.8 – 750 kVA electric power generation products in prime applications the warranty period is 12 months from date of start-up, unlimited hours (8760). For standby applications the warranty period is 24 months from date of start-up, limited to 500 hours per year.

730 – 2500 kVA electric power generation products in prime applications the warranty period is 12 months from date of start-up, unlimited hours (8760 hours) or 24 months from date of start-up, limited to 6000 hours. For standby applications the warranty period is 36 months from date of start-up, limited to 500 hours per year.

FG Wilson manufactures product in the following locations:
Northern Ireland • Brazil • China • India
With headquarters in Northern Ireland, FG Wilson operates through a Global Dealer Network.
To contact your local Sales Office please visit the FG Wilson website at www.fgwilson.com.

FG Wilson is a trading name of Caterpillar (NI) Limited.

In line with our policy of continuous product development, we reserve the right to change specification without notice.